Using Open Geospatial Consortium Sensor Web Enablement Frameworks to Assess Quality Controlled Data

Janet Fredericks (jfredericks@whoi.edu), Julie Bosch, Mike Botts, Eric Bridger, and Tony Cook

Overview

Over the past several years, as ocean programs have moved from sampling to long-time observations, funding agencies have stressed the need to move data from local servers to integrated systems, enabling interdisciplinary research and re-use of data across political and disciplinary boundaries. Towards that end, various groups across the globe have begun work towards the development of common methods which will enable the discovery and transport of common ocean observing parameters.

This effort demonstrates a capability to convey how a property in the ocean was sensed and processed into an oceanographic observation and answers:

DYNAMIC ASSESSMENT of DATA QUALITY

What sensor was used?
How was it configured?
Were there notable events that affect QA/QC ?
Were QC tests applied to the data?
Which ones? Test results?
What flagging convention was used ?

Data quality is of primary concern when building trust in shared data. Accuracy assessment and reporting of measurements uncertainty is essential to assure data product consistency and interoperability, implying that the instrument calibration and product validation need to be traceable.

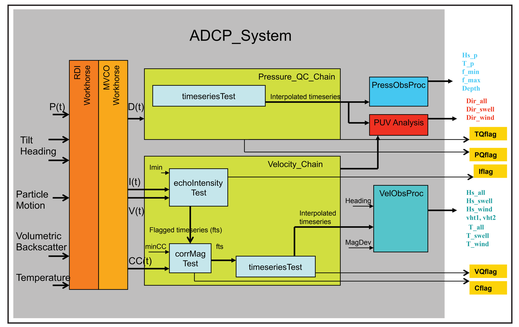

Joining Forces

The Q2O Project, short for QARTOD to OGC, brings together the work being done by the QARTOD (Quality Assurance in Real Time Oceanographic Data) community, the OGC Sensor Web Enablement (SWE) development and the Marine Metadata Interoperability Ontology Registry and Repository efforts in an application for Ocean Observing Systems.

QARTOD - a grassroots community approach to defining minimum requirements in QA/QC for oceanographic domains
OGC SWE - "geo-enabling the web" through consensus-based development of publicly available standards … Sensor ML for complete description of sensors and processing.

MMI provides the marine science community the tools and guidance for vocabulary and ontology applications via web services and the MMI-ORR enables this community to register its vocabularies and ontologies. Q2O was funded by the U.S. NOAA IOOS office to bring together domain experts, utilizing QARTOD recommended QA best-practices and QC tests, and information technology experts in Sensor Web Enablement, to integrate this information into the evolving ocean observing systems.

Bridging

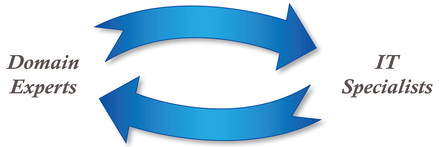

Understanding Sensor Web Enablement (SWE)

Sensor Observation Services provide http (secure) access to your system through three core offerings:
GetCapabilities - What does your system provide?
DescribeSensor - Describe the sensor, lineage, provenence, processing and input/output, including flags.
GetObservations - Give me the data! ASCII, binary… fully described using the SWE Framework. The data source can be real-time… or historical data… it can be from a sensor, an instrument, a data server or another observing system. Data sources can include bare results from a low-bandwidth offshore mooring, which are "wrapped" in Sensor ML, as part of the service... or from a IEEE 1451 web enabled sensor.

Defining Your System in SWE

The system is built on Sensor ML components. Each documents a unique part of a system. The System file links the components together which enables discovery of process lineage. The WHOI MVCO waves system, seen on the left, has components:

RDI_Workhorse.xml describes the sensor characteristics, manufacturer, model and is called an Original Equipment Manufacturer (OEM) file.

MVCO_Workhorse is the deployment/setup file that specifies how the sensor was set up, the details of the model configuration, the location or bounding box of the sensor system, including an Event List with information about maintenance or other QA related events.

The QC_Chains describe QARTOD recommended tests on the time series data which is input to the processing modules.

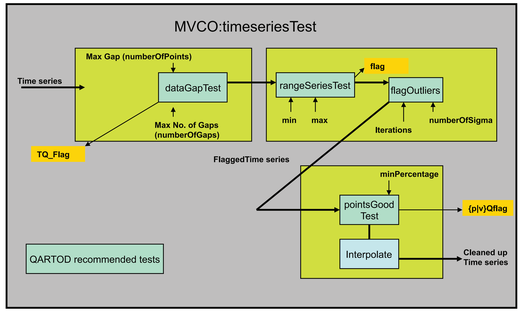

Developing & Harmonizing Vocabularies

By utilizing semantic frameworks, such as those enabled by the MMI Voc2RDF and Vine tools, terms can be related to other conventions providing data discovery and a broader utility. QA/QC terms, tests and flags must be developed and can be linked to the SWE offerings through utilizing URL encodings. These can be harvested by data aggregations centers utilizing ontologies to map similar or common terms.

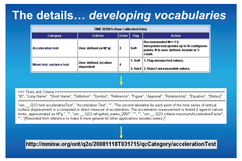

The example below demonstrates the ability to develop mappings with registered terms, enabling a data aggregation center to determine passed or failed tests, when each data provider utilizes a different flagging convention.

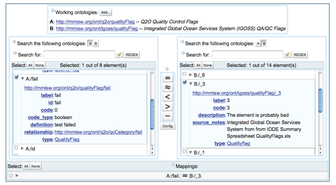

Recommended Next Steps

- Engage international domain experts to define common QA/QC best practices to enable a solid foundation in ocean observing systems
- Expand coordination with international SWE efforts
- Continue QA/QC integration into SWE bridging the expertise of domain specialists and IT specialists
- Demonstrate the integration of NetCDF/OpeNDAP data systems into the SWE framework
- Create and populate shared registries of terms, SensorML files, services and ontologies
- Harmonize QA/QC related vocabularies (code sets) and interdisciplinary terms, across programatic and institutional boundaries using domain specialists
- Develop tools and cookbooks for implementation at small and large facilities
- Demonstrate the capabilities through activities like GEOSS, IOOS, OOSTethys, Open IOOS and OGC Oceans-IE
- Promote shared adoption by coordination with various on-going efforts
- Coordinate training and international workshops for sensor manufacturers and data managers

This project was supported through the US-NOAA/IOOS award NA17RJ1223