Chemical composition of summertime High Arctic aerosols using chemical ionization mass spectrometry

Karolina Siegel[1,2], Paul Zieger[1], Matthew Salter[1], Linn Karlsson[1], Ilona Riipinen[1], Annica M.L. Ekman[2], Caroline Leck[2] and Claudia Mohr[1]
[1]Stockholm University, Department of Environmental Science, Atmospheric Science, Stockholm, Sweden (karolina.siegel@aces.su.se)
[2]Stockholm University, Department of Meteorology, Stockholm, Sweden

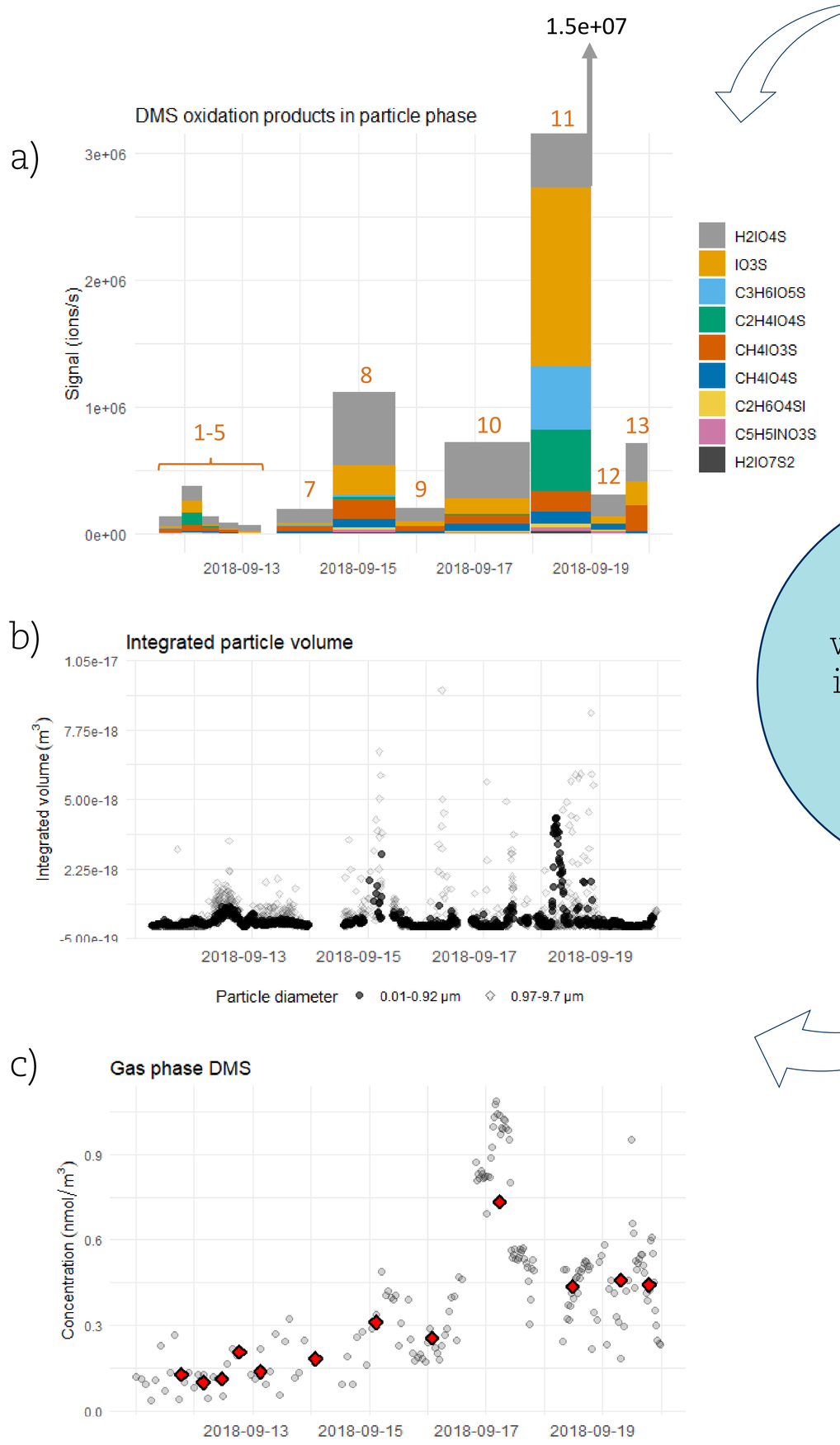

Figure 1. Results from analysis of (a) aerosol chemical composition (shown compounds are ionised by I^- in FIGAERO-CIMS), where the width of the bars show the timespan for each sampling period and orange numbers correspond to sample number (see Figure 3), (b) integrated particle volume for smaller particles (black dots) and larger coarse mode particles (grey diamonds), (c) gas phase DMS (grey dots represent individual measurements and red diamonds the mean concentration during each aerosol sampling period).

We have measured oxidation products from dimethyl sulphide (DMS) in aerosols…

Why?

Non-sea-salt sulphate (nss-SO_4^{2-}) aerosols are efficient cloud condensation nuclei (CCN)

…and the results are well in line with the measured integrated particle volume and ambient air DMS concentration

Where and when?

The High Arctic, September 2018 (Arctic summer and sea ice minimum)

How?

Chemical ionization mass spectrometry (FIGAERO-CIMS)

First time ever for Arctic aerosols!

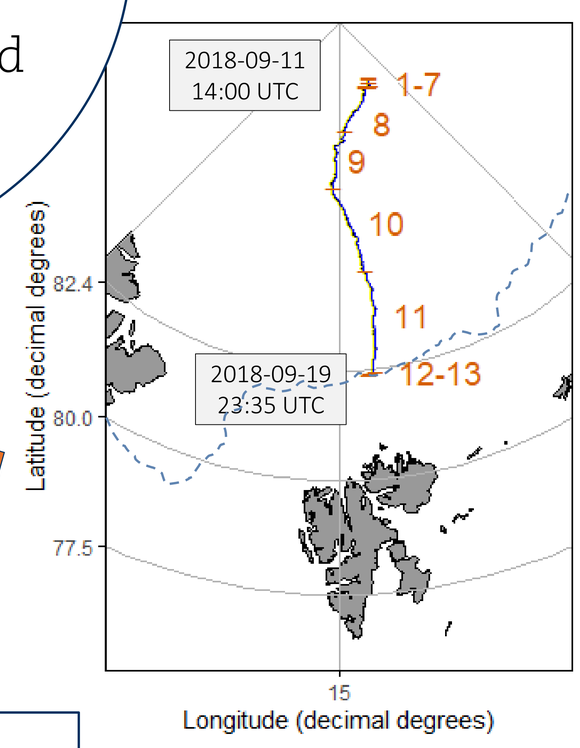

Figure 3. Route of the Swedish I/B Oden during Arctic Ocean 2018 (black line), the research cruise where all presented data was gathered. Orange markers and filter numbers represent locations for aerosol sampling. Start and end times for the sampling period are shown inside text boxes. Approx. sea ice cover on 2018-09-19 is shown as a dashed line (data provided from the U.S. National Snow and Ice data Center). The map was made by utilising the PlotSvalbard R package (Mikko Vihtakari, 2020).

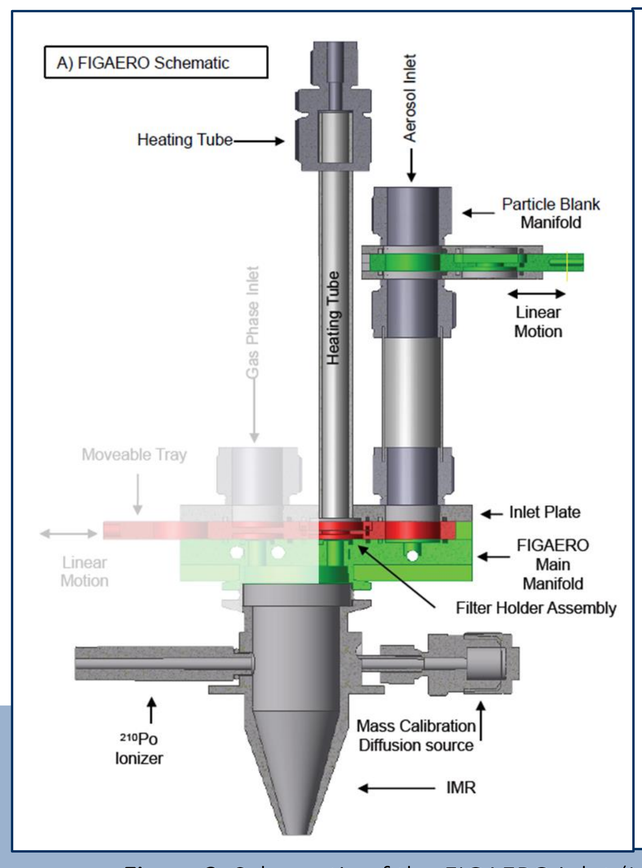

Figure 2. Schematic of the FIGAERO inlet (Lopez-Hilfiker et al., 2014, adapted). The greyed out part of the inlet is used for gas-phase measurements and was not utilised in this project.

Method overview:

- Ambient aerosols were sampled onto PTFE filters through a whole-air inlet ~25 m above sea level (4th deck of I/B Oden).
- After being stored frozen, the samples were analysed by FIGAERO-HRToF-CIMS at Stockholm University, Sweden.
- In our HRToF-CIMS, the sample molecules are ionised by iodide ions (I^-). The negatively charged adducts are then separated by mass, allowing for characterisation on a molecular level.

Details:

- Sampling time: 6.7 – 35.3 hours
- Filters: 24mm Zefluor® PTFE filter (Pall)
- Desorption temp. in FIGAERO: ≤ 200°C
- Instrument accuracy: ≤ 10 ppm

Stockholm University | Bolin Centre for Climate Research

CC BY

DOI: EGU2020-21012